Connector

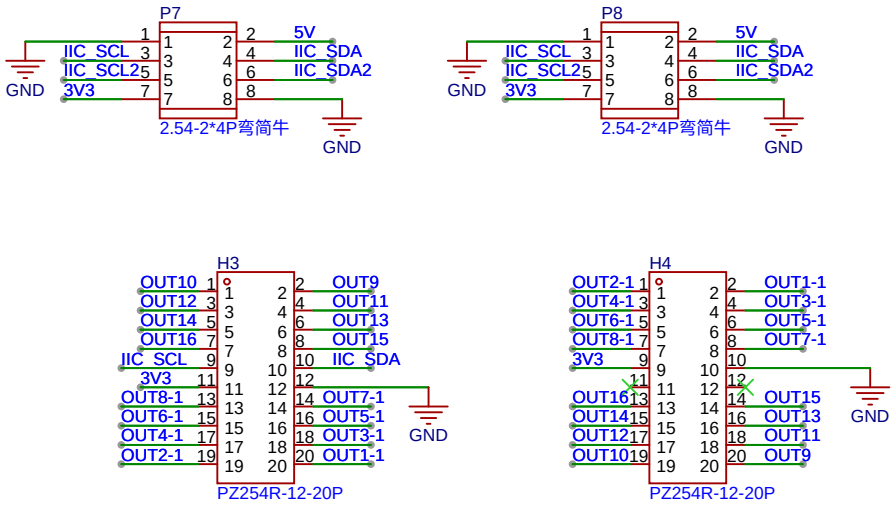

DOMIX - Domotic module for smart home & co			Create at	2026-02-03	Drawn	carletz
			Update at	2026-02-03	Reviewed	carletz
Version	Size	Page 1 Total 1	Schematic	M7 - Vertical Module		
1	A4	EasyEDA	Board	V7 - OUTPUT - VERTICAL	Page	Connector